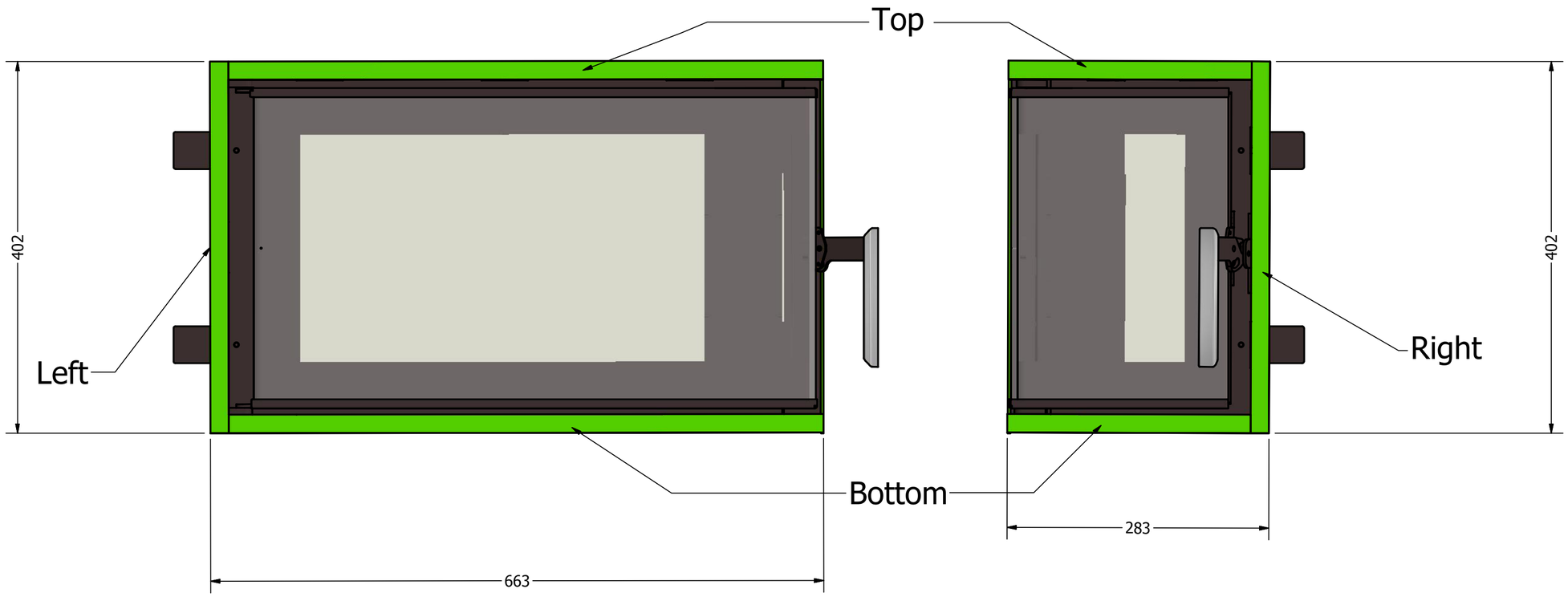

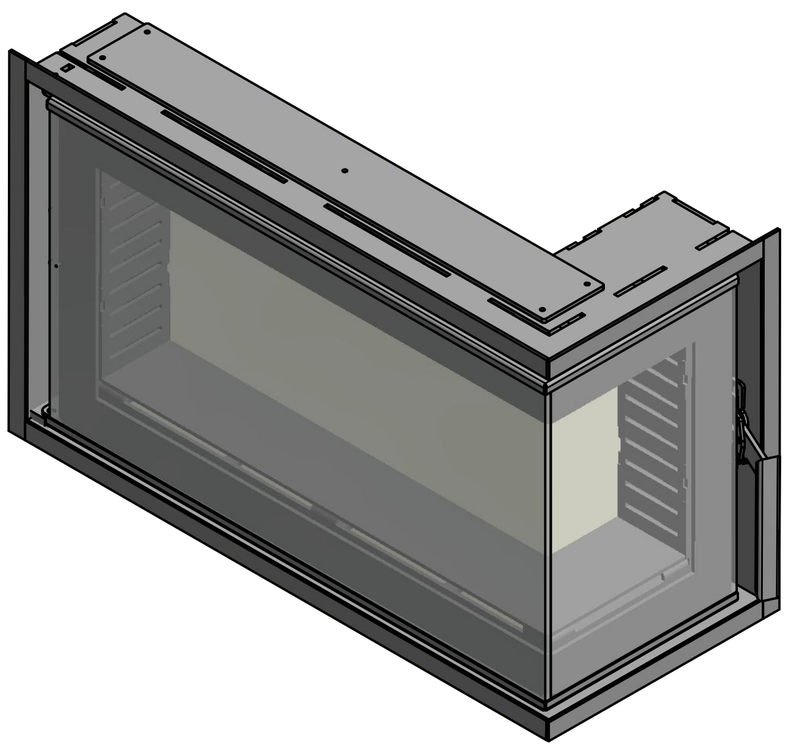

DRAWN KISS KANDALLÓ	2020.12.08.	
CHECKED		TITLE
QA		
MFG		
APPROVED		
		SIZE C / DWG NO KKL-600220-3Ds 2019 rajz20 / REV
		SCALE / SHEET 1 OF 1