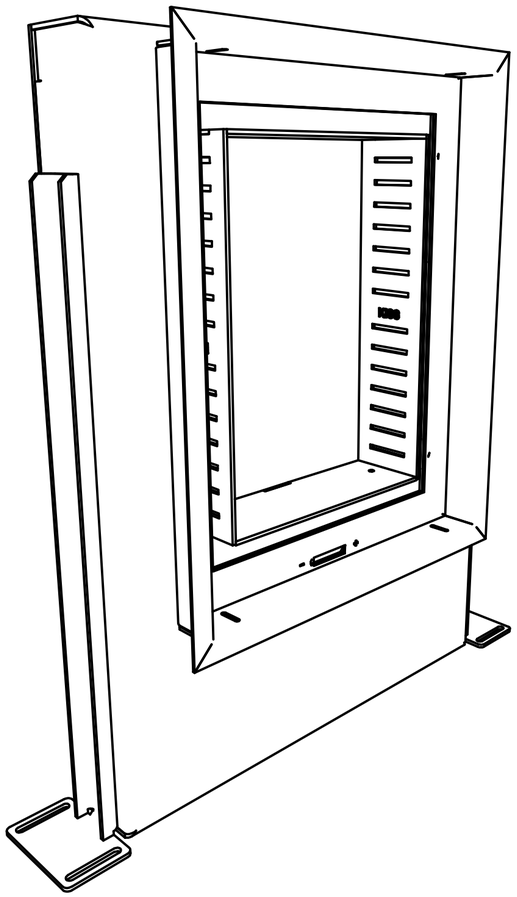

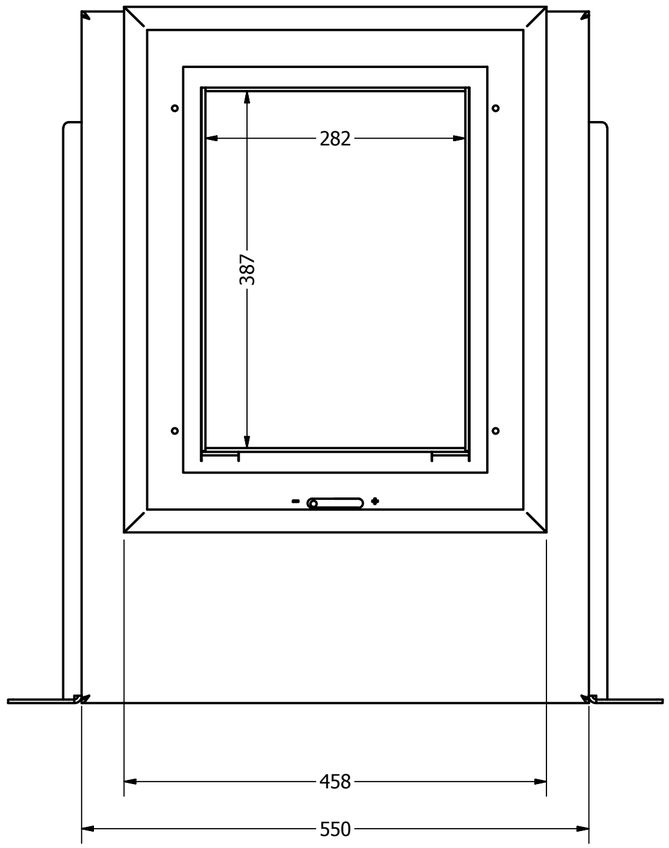

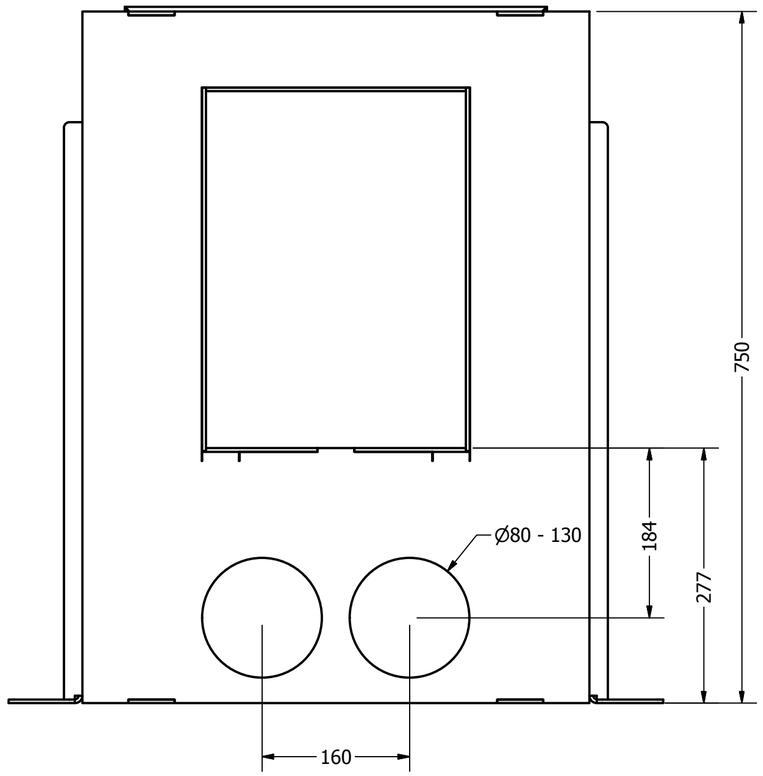

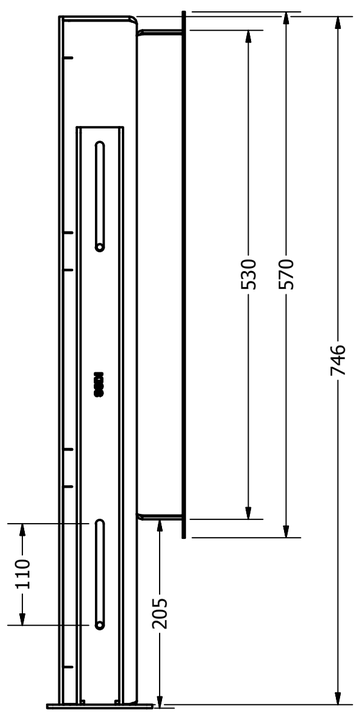

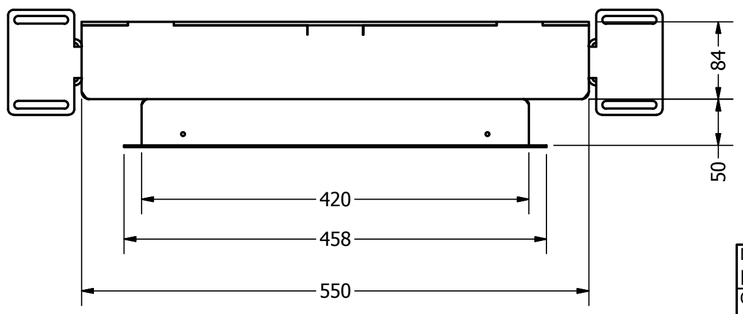

DRAWN KISS KANDALLÓ	2017.01.07.	
CHECKED		TITLE
QA		KK3647
MFG		
APPROVED		SIZE C / DWG NO KK-360470-3Ds rajz / REV
		SCALE / SHEET 1 OF 1